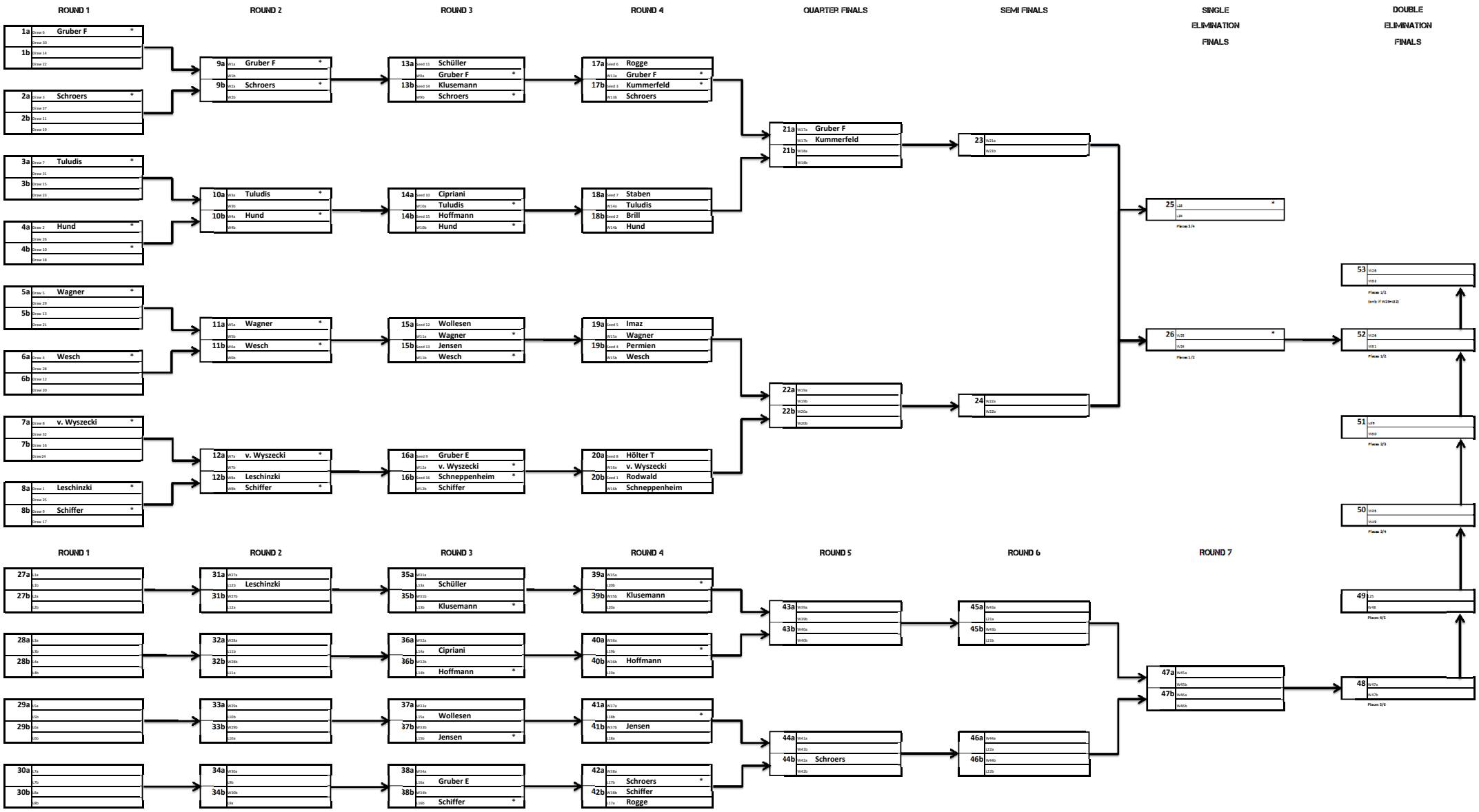
ROUND 1
ROUND 2
ROUND 3
ROUND 4
QUARTER FINALS
SEMI FINALS
SINGLE ELIMINATION FINALS
DOUBLE ELIMINATION FINALS
1a Gruber F
1b
2a Schroers
2b
3a Tuludis
3b
4a Hund
4b
5a Wagner
5b
6a Wesch
6b
7a v. Wyszecki
7b
8a Leschinzki
8b Schiffer
9a Gruber F
9b Schroers
10a Tuludis
10b Hund
11a Wagner
11b Wesch
12a v. Wyszecki
12b Leschinzki
Schiffer
13a Schüller
13b Klusemann
14a Cipriani
14b Hoffmann
15a Wollesen
15b Jensen
16a Gruber E
16b Schneppenheim
17a Rogge
17b Kummerfeld
18a Staben
18b Brill
19a Imaz
19b Permien
20a Hölter T
20b Rodwald
21a Gruber F
21b Kummerfeld
22a
22b
23
24
25
26
Places 3/4
Places 1/2
53
52
51
50
49
48
Places 1/2
(only if W26=B2)
Places 1/2
Places 2/3
Places 3/4
Places 4/5
Places 5/6
ROUND 1
ROUND 2
ROUND 3
ROUND 4
ROUND 5
ROUND 6
ROUND 7
27a
27b
28a
28b
29a
29b
30a
30b
31a Leschinzki
31b
32a
32b
33a
33b
34a
34b
35a Schüller
35b Klusemann
36a Cipriani
36b Hoffmann
37a Wollesen
37b Jensen
38a Gruber E
38b Schiffer
39a
39b Klusemann
40a
40b Hoffmann
41a
41b Jensen
42a Schroers
42b Schiffer
43a
43b
44a
44b Schroers
45a
45b
46a
46b
47a
47b
48